THIS IS CONFIDENTIAL INFORMATION.
THIS DRAWING AND DESIGN IS THE PROPERTY OF LIQUIP INTERNATIONAL PTY LIMITED.
IT MUST NOT BE COPIED OR REPRODUCED IN ANY WAY WHATSOEVER AND/OR PASSED ON TO ANY THIRD PARTY WITHOUT WRITTEN AUTHORITY.

LIQUIP INTERNATIONAL PTY LIMITED - ENGINEERING DEPARTMENT - 13 HUME RD SMITHFIELD SYDNEY NSW AUSTRALIA 2164
PH: +61 2 9725 9000 FAX: +61 2 9609 4739 EMAIL: engineering@liquip-nsw.com.au

Diptronic Power Connector Harnesses

P7361

When connecting two electronic wiring systems together, such as between a prime mover and trailer, the connection needs to have the following properties;

- Robust enough for road travel
- Resistant to weather
- Suitably shielded
- Of sufficient length to facilitate all turning manoeuvres & routed to prevent chafing and fouling.

The powered side of the connector must always have female socket connections to reduce risk of short circuits that arise with male pins.
Also, the connection side that requires surface mounting or a free cable end needs to be determined.
To decide which kits are required for your situation, see the following figure.

Kit DIP200-11Z
Plug, cable end, body – female electrical contacts

Kit DIP200-12Z
Socket, surface mount, body – male electrical contacts

Kit DIP200-13Z
Socket, surface mount, body – female electrical contacts

Kit DIP200-14Z
Plug, cable end, body – male electrical contacts

THIS IS CONFIDENTIAL INFORMATION.
THIS DRAWING AND DESIGN IS THE PROPERTY OF LIQUIP INTERNATIONAL PTY LIMITED.
IT MUST NOT BE COPIED OR REPRODUCED IN ANY WAY WHATSOEVER AND/OR PASSED ON TO ANY THIRD PARTY WITHOUT WRITTEN AUTHORITY.

LIQUIP INTERNATIONAL PTY LIMITED - ENGINEERING DEPARTMENT - 13 HUME RD SMITHFIELD SYDNEY NSW AUSTRALIA 2164
PH: +61 2 9725 9000 FAX: +61 2 9609 4739 EMAIL: engineering@liquip-nsw.com.au

ELECTRICAL POWER CONNECTIONS BETWEEN PRIME MOVER & TRAILER

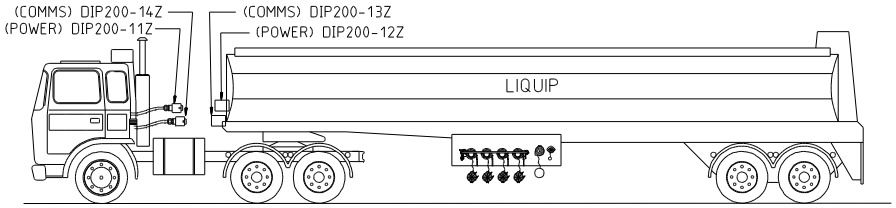

SEMI-TRAILER

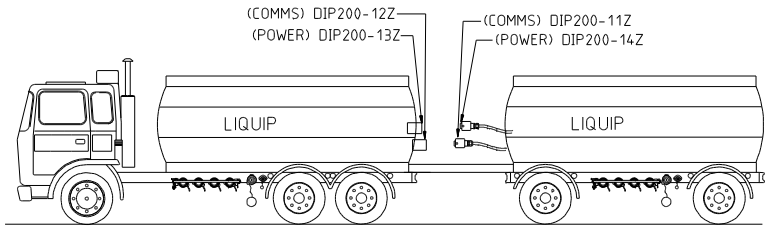

RIGID WITH DOG TRAILER

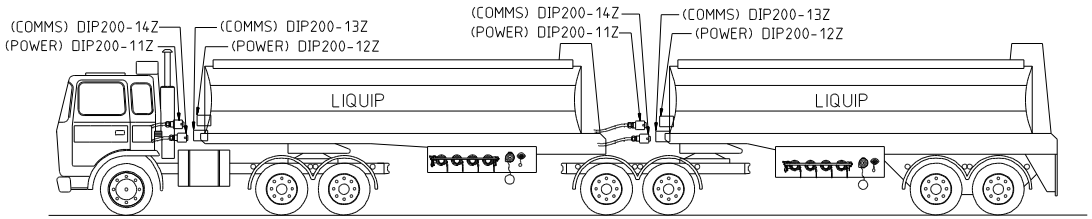

A/B-DOUBLE

NO CONNECTOR HARNESS REQUIRED

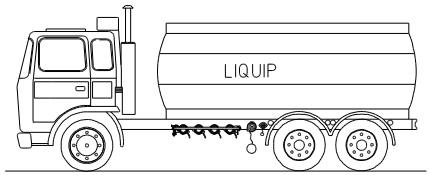

RIGID ONLY

P7361 Fig 1

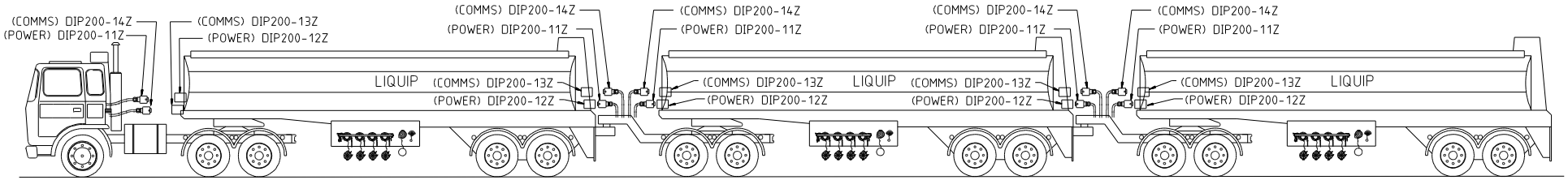

ROAD TRAIN

THIS IS CONFIDENTIAL INFORMATION.
THIS DRAWING AND DESIGN IS THE PROPERTY OF LIQUIP INTERNATIONAL PTY LIMITED.
IT MUST NOT BE COPIED OR REPRODUCED IN ANY WAY WHATSOEVER AND/OR PASSED ON TO ANY THIRD PARTY WITHOUT WRITTEN AUTHORITY.

LIQUIP INTERNATIONAL PTY LIMITED - ENGINEERING DEPARTMENT - 13 HUME RD SMITHFIELD SYDNEY NSW AUSTRALIA 2164
PH: +61 2 9725 9000 FAX: +61 2 9609 4739 EMAIL: engineering@liquip-nsw.com.au

When ordering Diptronic connection components, you will need to specify what kit numbers are required (remember each kit is only one half of the connection).
Note: Cable is not included in the kits and must be ordered separately as Liquip part 6930, in 100m rolls or cut to length.
For example, if you were connecting a semi-trailer to its prime mover you would need…

- 1 x DIP200-11Z with X metres of cable (6930) and
- 1 x DIP200-12Z with Y metres of cable (6930)

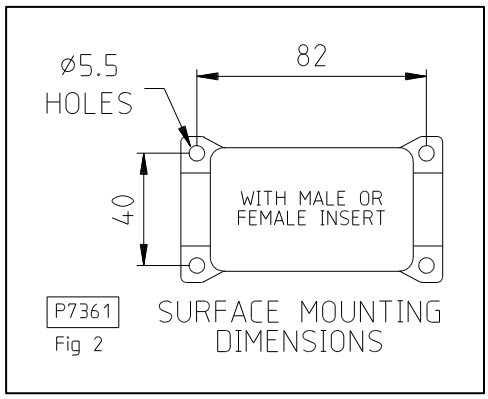

For surface mounted socket bodies, 4 off M5 x 30mm long capscrews are supplied with star washers and nyloc nuts. Drill 4 x Ø5.5 holes spaced as shown at right through panel that connector is to be mounted to.
Be careful not to drill into any wiring that may be behind the panel or into a tank compartment!

When mounting body onto panel, ensure star washers are used under the head of the capscrew and under the nyloc nut. Star washers are used so that tightening the mounting bolts cause the washer to bite into both the connector housing and the panel it is mounted to provide optimal electrical continuity between the ground connection in the housing and the chassis of the vehicle.

To connect the wires coming out of the connectors to the appropriate hardware/connections, see the wiring table below. (Note: cores within cable are numbered from 1 to 11 plus a green/yellow)

Core No.	Pin No.	Trailer Connects to:
1	1	Not Used
2	2	Not Used
3	3	Not Used
4	4	POWER IN +11.5V to +30V on CPU (or to POWER IN (+) BBC)
5	5	ELECTRICAL GND (-) Negative return
6	6	ELECTRICAL GND (-) Negative return
7	7	POWER IN +11.5V to +30V on CPU (or to POWER IN (+) BBC)
8	8	Not Used
9	9	Not Used
10	10	ELECTRICAL GND (-) Negative return
11	Housing	Chassis of Vehicle
GRN/YEL	Housing	Chassis of Vehicle

Core No.	Pin No.	Prime Mover Connects to:
1	1	Not Used
2	2	Not Used
3	3	Not Used
4	4	POWER IN +11.5V to +30V, DCC100
5	5	ELECTRICAL GND (-) Negative return , DCC100
6	6	ELECTRICAL GND (-) Negative return , DCC100
7	7	POWER IN +11.5V to +30V, DCC100
8	8	Not Used
9	9	Not Used
10	10	ELECTRICAL GND (-) Negative return
11	Housing	Chassis of Vehicle
GRN/YEL	Housing	Chassis of Vehicle

Cable will need to have approximately 60mm of outside sheath removed and sufficient insulation removed from each core.
Liquip recommends the use of crimped or soldered ferrules on wire ends to ensure long life and secure connections.

THIS IS CONFIDENTIAL INFORMATION.
THIS DRAWING AND DESIGN IS THE PROPERTY OF LIQUIP INTERNATIONAL PTY LIMITED.
IT MUST NOT BE COPIED OR REPRODUCED IN ANY WAY WHATSOEVER AND/OR PASSED ON TO ANY THIRD PARTY WITHOUT WRITTEN AUTHORITY.

LIQUIP INTERNATIONAL PTY LIMITED - ENGINEERING DEPARTMENT - 13 HUME RD SMITHFIELD SYDNEY NSW AUSTRALIA 2164
PH: +61 2 9725 9000 FAX: +61 2 9609 4739 EMAIL: engineering@liquip-nsw.com.au

LIQUIP

POWER HARNESS KITS

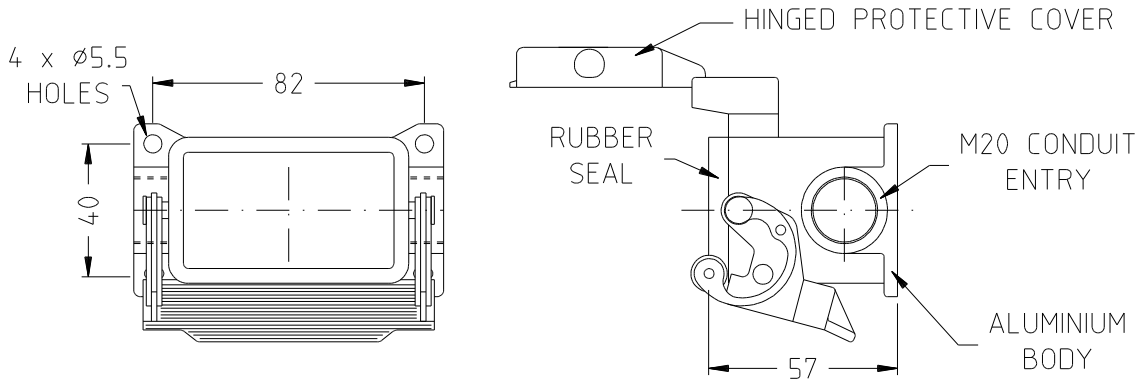

6928 - Socket, surface mount, housing only

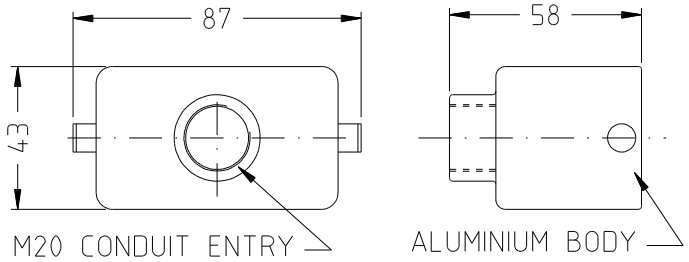

6929 - Plug, cable end, housing only

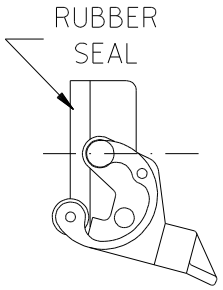

6933 - Dust cover for plug

RATINGS
PROTECTION: IP65
CURRENT: 16A

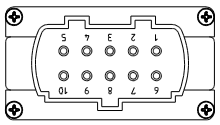

6926 - Male Insert
(pin contacts)

VIEWS FROM FRONT

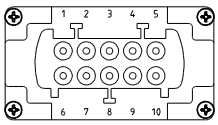

6927 - Female Insert
(socket contacts)

KIT PART No	COMPONENTS
DIP200-11Z	CABLE END PLUG (WITH COVER) & FEMALE INSERT
DIP200-12Z	SURFACE MOUNTED SOCKET & MALE INSERT
DIP200-13Z	SURFACE MOUNTED SOCKET & FEMALE INSERT
DIP200-14Z	CABLE END PLUG (WITH COVER) & MALE INSERT

X352203

Issue: A

CABLE (LIQUIP PART 6930) IS SUPPLIED SEPARATELY. WHEN ORDERING SPECIFY REQUIRED LENGTH
ALL KITS ARE SUPPLIED WITH CABLE GLAND (6931) AND INSTRUCTION LEAFLET FOR WIRING.
SURFACE MOUNTED HOUSINGS ARE SUPPLIED WITH MOUNTING FASTENERS.

METERS - VALVES - VENTS - MANHOLES - PUMPS - HOSEREELS - OVERFILL PROTECTION - LOADING ARMS - ELECTRONIC DIPSTICKS

LIQUIP INTERNATIONAL PTY LTD
13 Hume Road
Smithfield, Sydney
NSW Australia 2164
Phone: +61 2 9725 9000
Fax: +61 2 9725 1252

DISTRIBUTORS
See inside front cover for Liquip branches and Distributors or visit
www.liquip.com